CERAFLEX

Ideal Standard

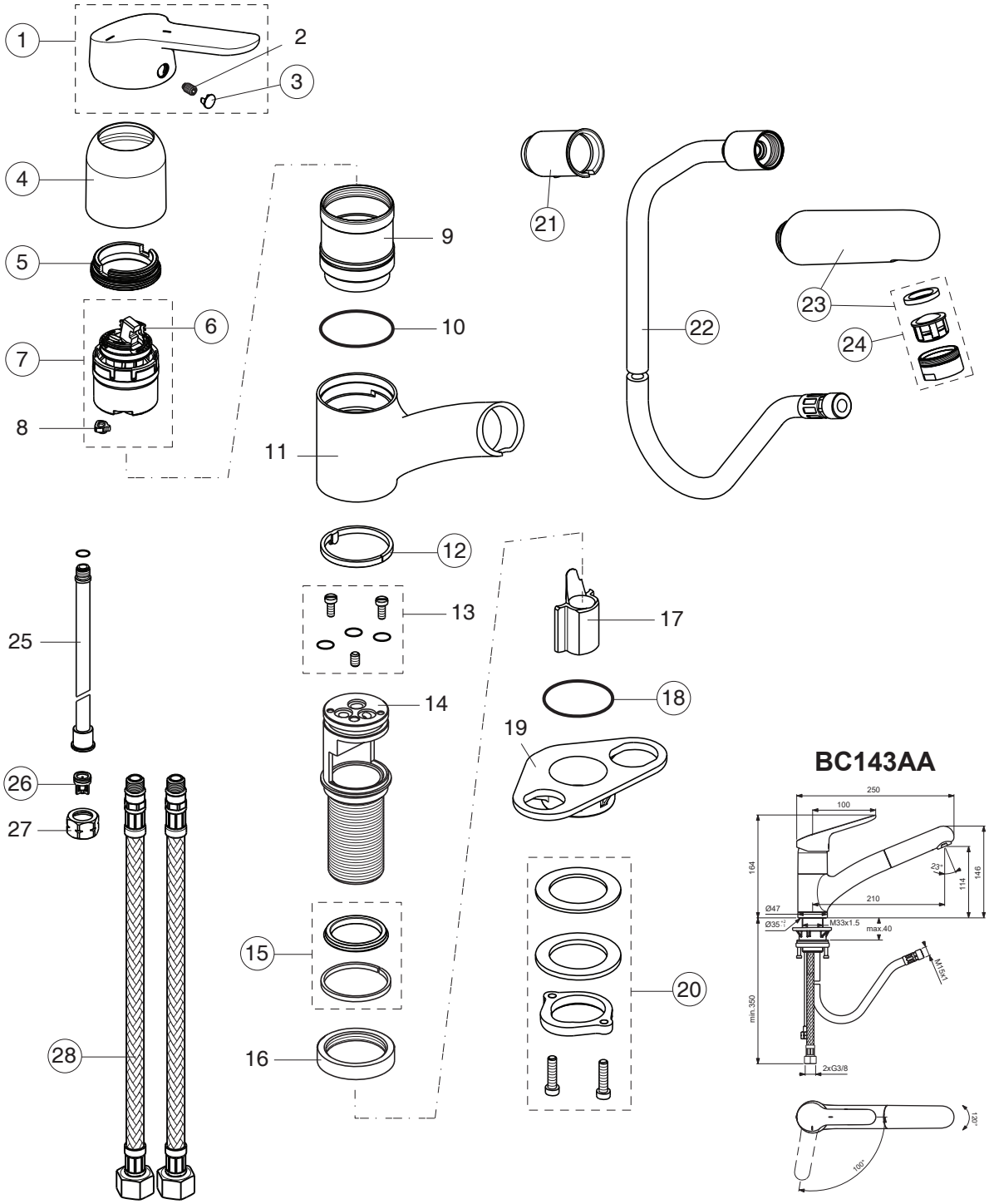

Pos.	Signify	Spare parts-Nr.	Quantity	Pos.	Signify	Spare parts-Nr.	Quantity
1	Lever,w/logo-set	B961461AA	1 Pcs.	15	Sealing set	B960784NU	1 Pcs.
2	Screw M5x8		1 Pcs.	16	Rosette decorative		1 Pcs.
3	Cap decorative	B960473AA	1 Pcs.	17	Schlauchfuehrung		1 Pcs.
4	Rosette	B961431AA	1 Pcs.	18	O-Ring Ø37.77x2.62	A962574NU	1 Pcs.
5	Screw M41x1.5/M38x1.5	B961374NU	1 Pcs.	19	U plate support bracket fix.kit		1 Pcs.
6	Hot limit stop	A861181NU	1 Pcs.	20	Connecting group	B960255NU	1 Set
7	Cartridge Ø38mm	A861156NU*	1 Pcs.	21	Plastic insert	A960911NU	1 Pcs.
8	Pin		1 Pcs.	22	Plastic hose L1500	A963699NU	1 Pcs.
9	Manifold		1 Pcs.	23	Pull out spray	B961463AA	1 Pcs.
10	O-Ring Ø39.1x1.3		1 Pcs.	24	Casc.perlator M24x1-B	A960932AA	1 Pcs.
11	Body kitchen Combi		1 Pcs.	25	Tube welded		3 Pcs.
12	Ring slider-120º	B961465NU	1 Pcs.	26	Rv-patrone	A960944NU	2 Pcs.
13	Sealing set		1 Pcs.	27	Nut M15x1		1 Pcs.
14	Manifold,w/shank		1 Pcs.	28	Fl.pexhose G3/8,L500mm	A962005NU	1 Pcs.

**Universal set (not all parts needed)*

10.2020