Rev	Design Change Note	Author	Date
001	Dimension 3 changed to 4	DR	2012-05-07
002	Sheet updated	PP	2012-05-15

A-A (1 : 5)

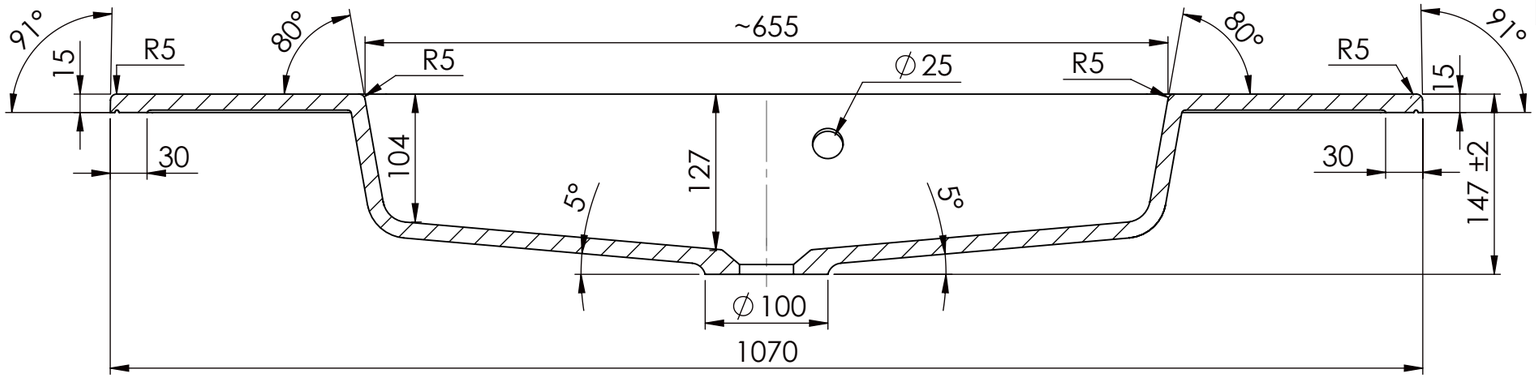

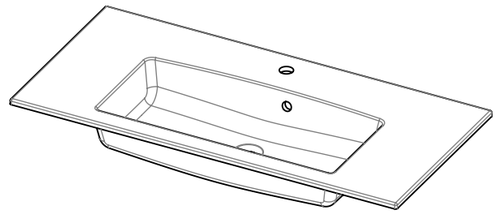

B-B (1 : 5)

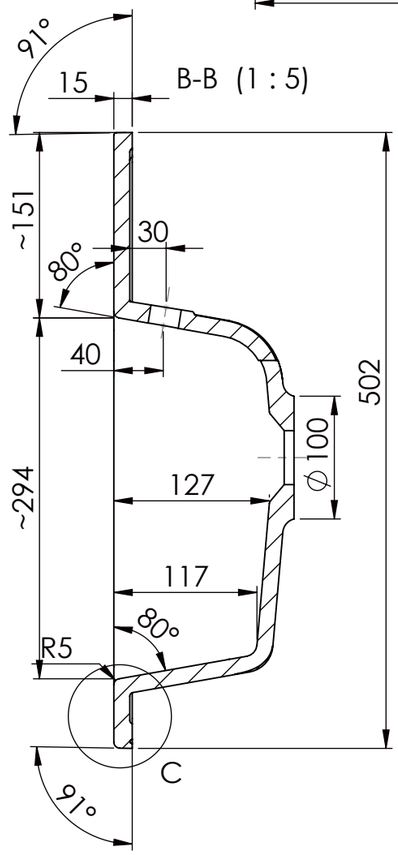

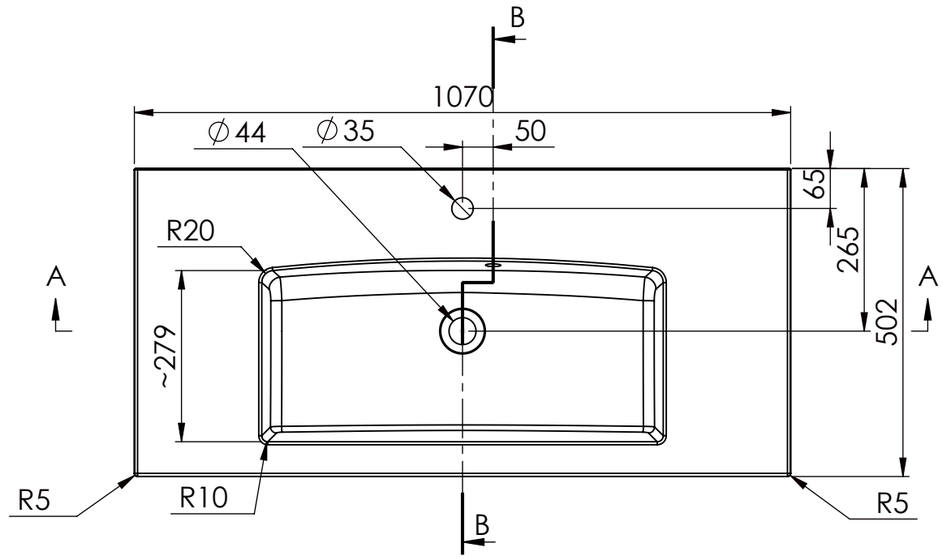

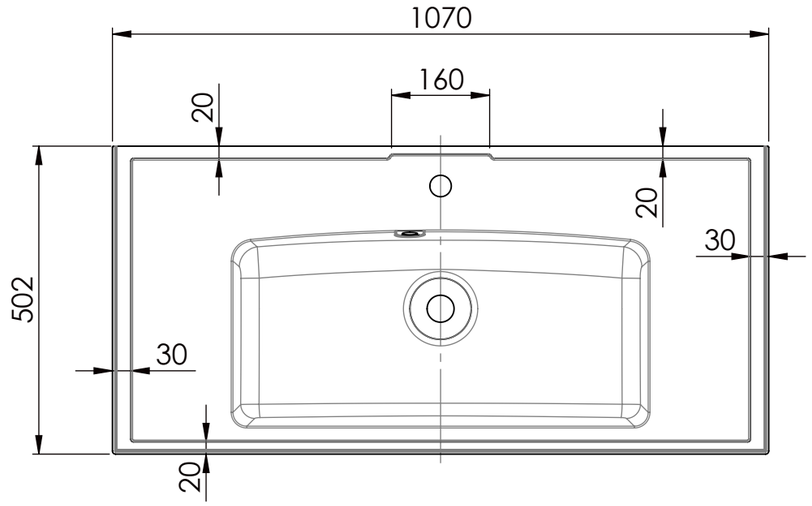

C (1 : 2)

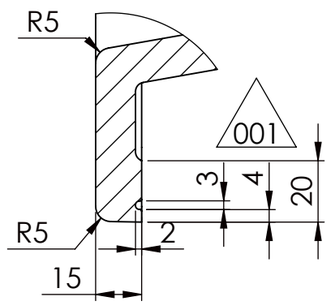

This document must not be copied without our written permission, and the contents thereof must not be imparted to a third party nor be used for any unauthorized purpose. Contravention will be prosecuted.