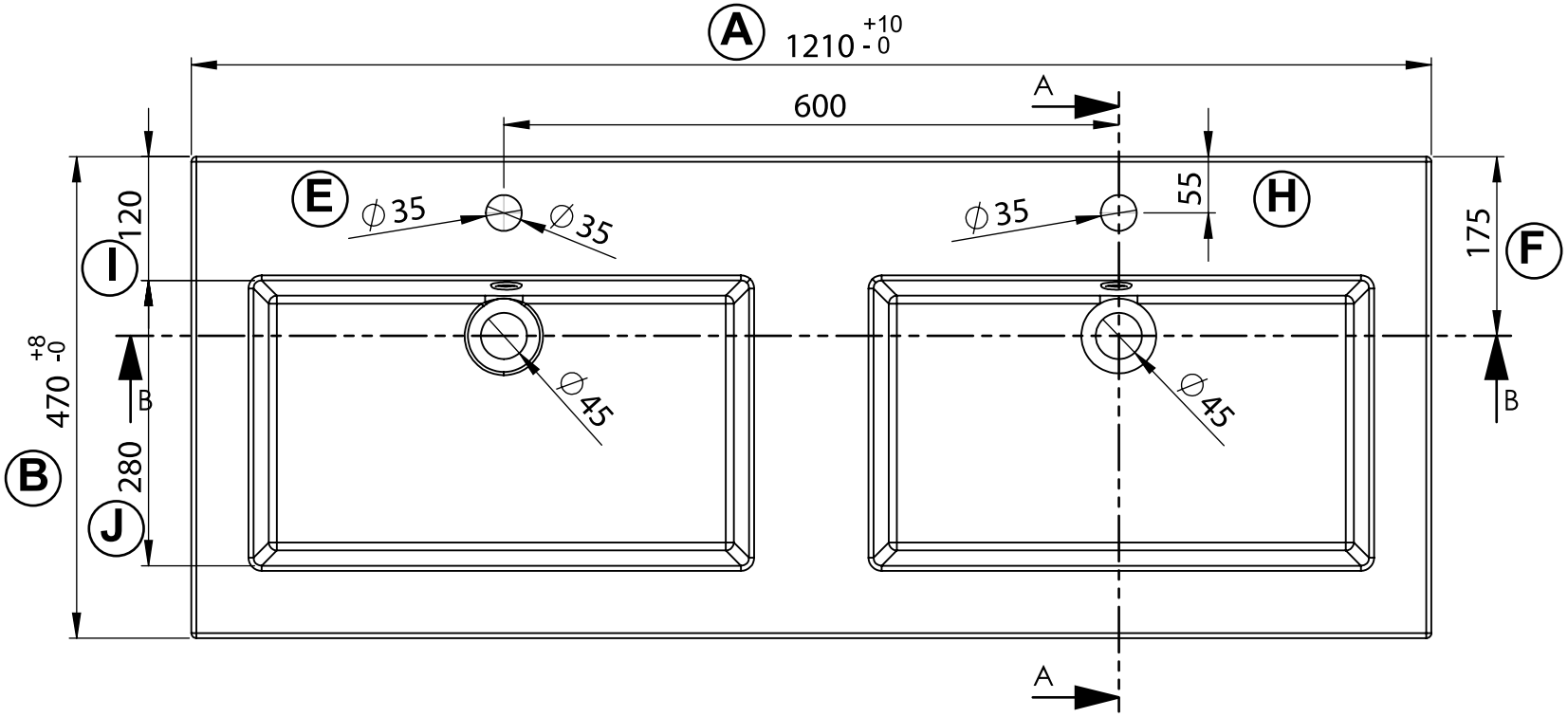

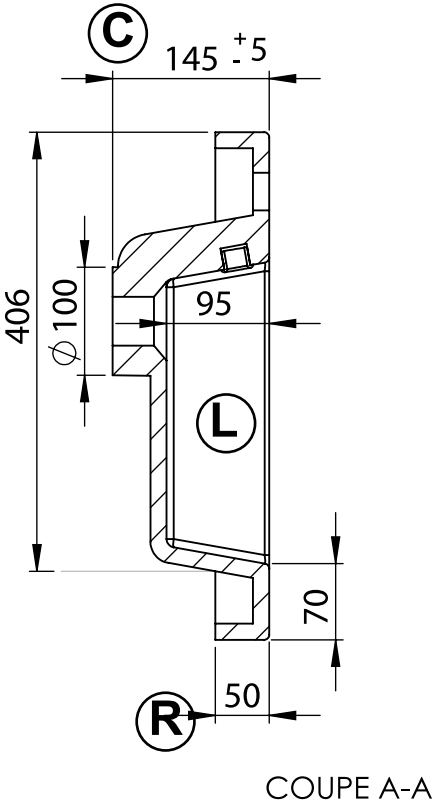

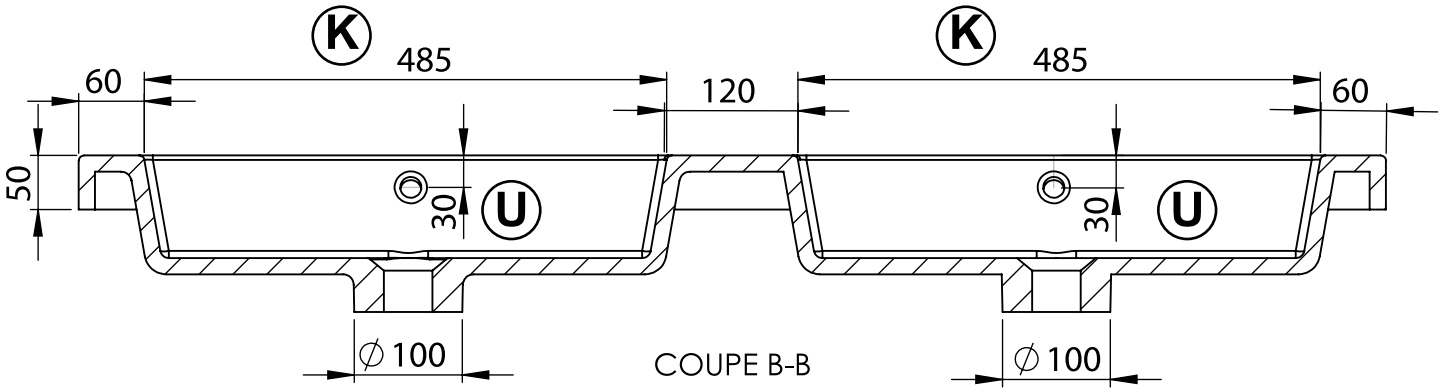

Patented and Registered Design

824869

Revision A1