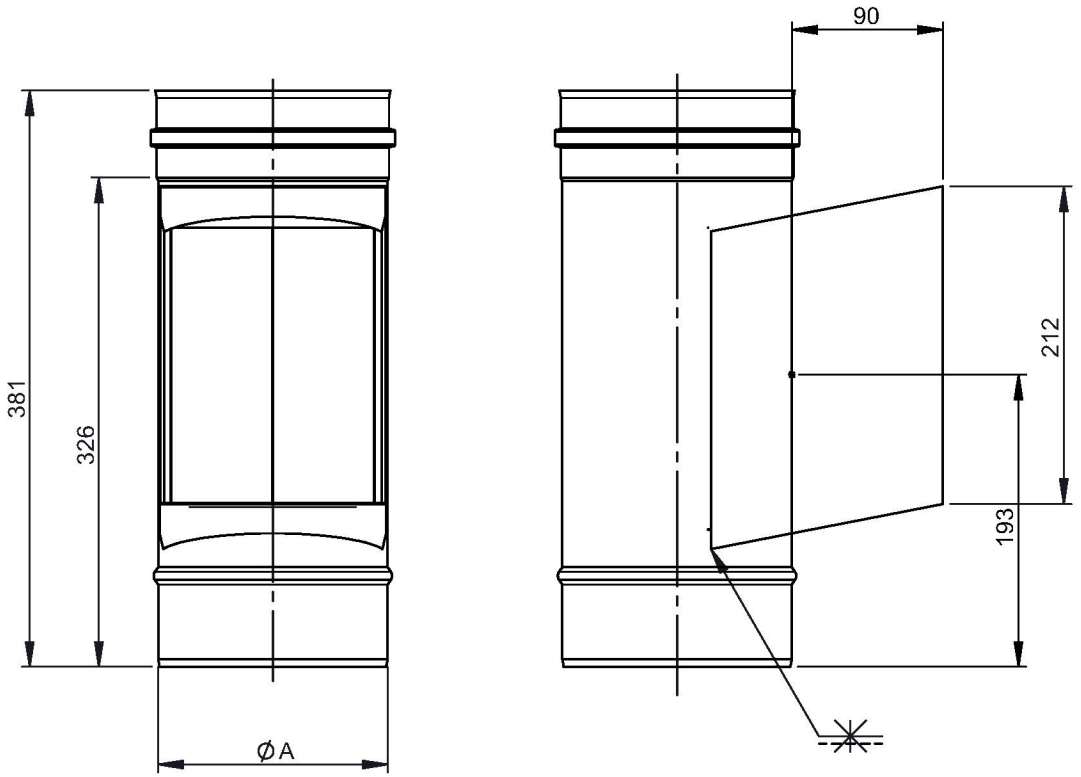

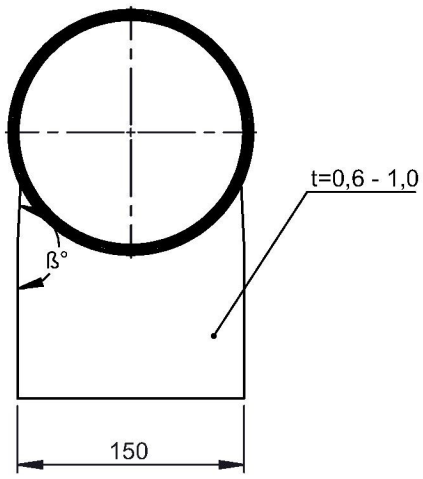

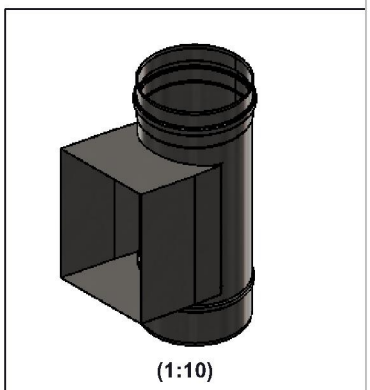

Ø				0115	0120	0130		0150	0160	0180										
A				115	120	130		150	160	180										
ß°				153,5°	157,4°	164,9°		177,2°	180°											
t	0,6																			
kg				1,02	1,05	1,1		1,21	1,26	1,37										

material: inside/outside			surface: inside/outside			
316L			3C	revisions-no.	Rev	
					date	name
				drawn	18.12.2009	FST
				checked		
				checked		
	A3	02.11.2015	KAB	checked		
	A2	17.02.2014	JGR	appr.		
	revision	date	name	All rights reserved!		

jeremias CHIMNEY SYSTEMS

description: EW-EW 07 Reinigungselement 210x140mm

code: **EW-EW 07**

drawing-no.

Scale: 1:5

Format: A4

Sheet: 1