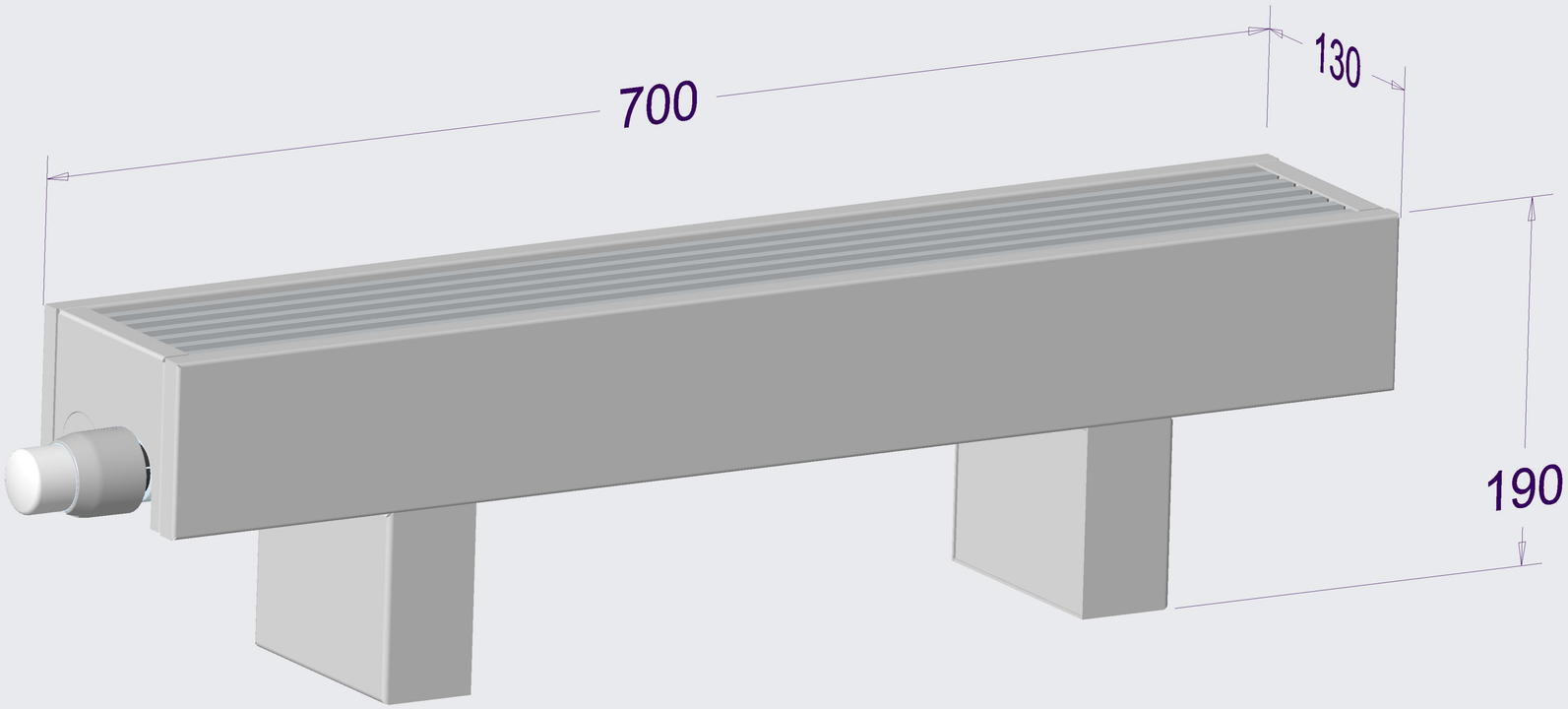

Instance:LKO_70_09_13.ASM